3FT 72” Eurofit LiteWay

Product Parts

1 - Top Corner Poles (x2)
2 - Left Side
3 - Right Side
4 - Bottom Corner Poles (x2)
5 - Top & Bottom Center Poles (x2)
6 - Graphic
7 - Feet (x2)
8 - Crossbar

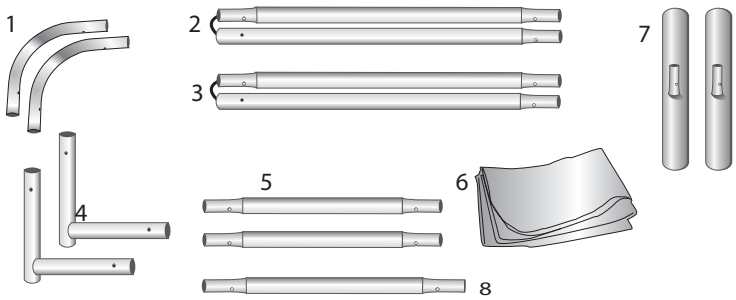

Display Set-Up

Step 1

Begin by removing all parts from the carry case and place on a clean, flat surface. Ensure you have all the components listed above.

Step 2

Assemble all the poles by connecting the corresponding numbers together while pressing the snap button as shown.

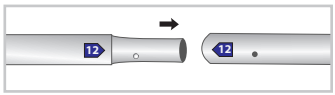

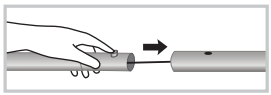

Step 3

Continue to connect the poles illustrated in the image below.

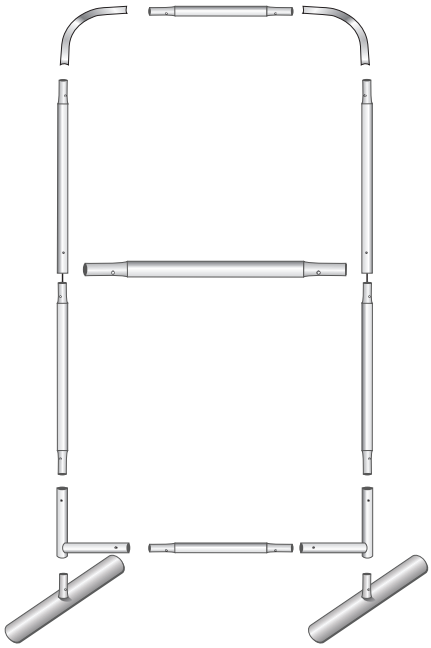

Step 4

Drape the Graphic (6) over the hardware as shown.

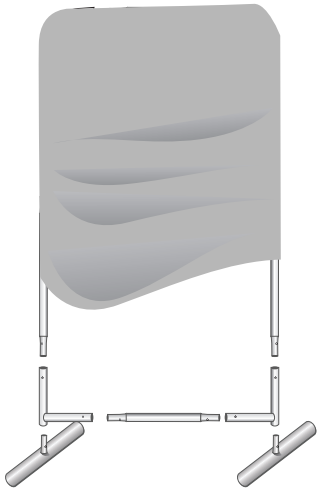

Storage & Care

Place all product parts into Carry Case and store in a cool dry location. Recommended for indoor use only.
Machine wash on gentle cycle using mild detergent. Tumble Dry No Heat. Do NOT dry clean, Do NOT Iron.